# Parts Manual

## "ZERO CLEARANCE" & "RAV" STYLE ARM

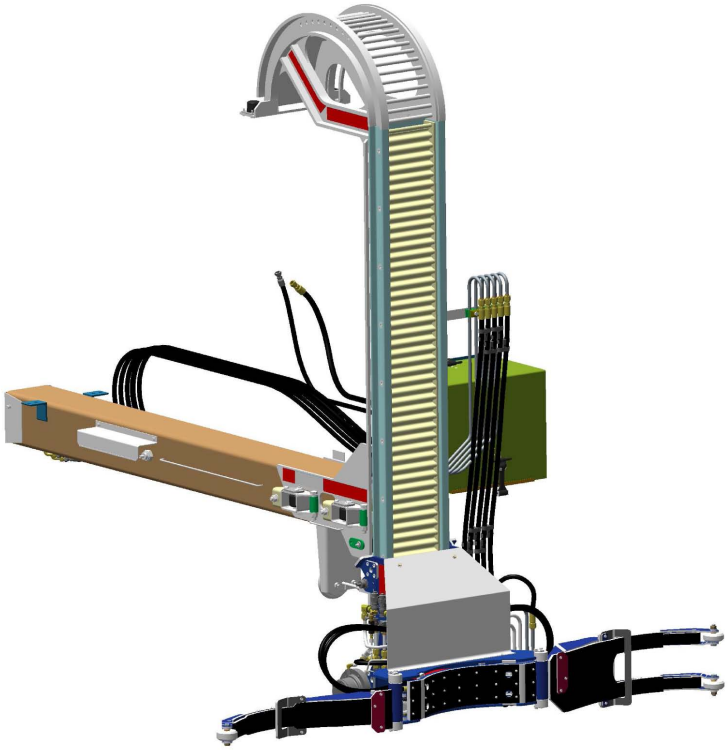

labrie

Labrie Enviroquip Group

equipment for the solid waste industry

LABRIE LEACH WITTKE

# labrieplus

Thank you for your purchase of a new Zero Clearance Arm. To ensure maximum reliability, Insist on genuine **labrie*plus*** replacement parts. Labrie Plus replacement parts are designed and manufactured to exacting standards. The use of counterfeit, will-fit or substitute parts may effect the operation and performance of the unit.

Visit our web site at www.labrieplus.com, or contact us at 1-800-231-2771, twenty four hours a day, seven days a week. We are available to help you with any questions or concerns

labrie
Labrie Enviroquip Group
equipment for the solid waste industry

LABRIE LEACH WITTKE

# TABLE OF CONTENTS

**LABRIE PLUS** . . . . . 1
**TABLE OF CONTENTS** . . . . . 2
**CAPSCREW MARKING and TORQUE VALUES CHART** . . . . . 3

**SECTION 1 Arm Assembly**
Outer Frame - Single Side Roller . . . . . 5
Outer Frame - Dual Side Roller . . . . . 7
Inner Frame/Arm . . . . . 9
Inner Frame/Arm S/N AG14701NVI and After . . 11
Grabber Assembly - Belt Style . . . . . 13
Grabber Assembly - Belt Style S/N AG14701NVI and After . . . . . 15
Grabber Finger - Single Belt Style . . . . . 17
Grabber Finger - Dual Belt Style . . . . . 19
Grabber Assembly - “RAV” Style . . . . . 21
Grabber Finger - Double - “RAV” Style . . . 23
Grabber Finger - Single - “RAV” Style . . . 24

**SECTION 2 Hydraulics**
Arm - Single Side Roller . . . . . 25
Arm - Dual Side Roller . . . . . 27
Grabber . . . . . 29
Grabber - Arm 845152 and After . . . . . 31

**SECTION 3 Electrical**
Arm Sensors . . . . . 33

**SECTION 4 Valves**
HYV02681 . . . . . 35
HYV02542 . . . . . 36
Motor - 0039-211 . . . . . 37
Motor - 0039-212 . . . . . 38
Brake - 0044-285 . . . . . 39

**SECTION 5 Cylinders**
In/Out Cylinder 0020-177 . . . . . 41
Grabber Cylinder 0020-292 . . . . . 42

# CAPSCREW MARKING AND TORQUE VALUES

| Usage | Much Used | Used at Times | Used at Times |
|---|---|---|---|
| Capscrew Diameter & Minimum Tensile Strength PSI | To 3/4 - 120,000<br>To 1 - 115,000 | To 5/8 - 140,000<br>To 3/4 - 133,000 | 150,000 |
| Quality of Material | Min. Commercial | Med. Commercial | Best Commercial |
| SAE Grade Number | 5 | 6 or 7 | 8 |
| CAPSCREW HEAD MARKINGS<br>Manufacturers marks may vary.<br>These are all SAE Grade 5 (3-line.) | | | |
| Capscre w Bod y Size (Inches) - (Thread) | Torque Ft-Lb (kg m) | Torque Ft-Lb (kg m) | Torque Ft-Lb (kg m) |
| 1/4 - 20 | 8 (1.11) | 10 (1.38) | 12 (1.66) |
| - 28 | 10 (1.38) | | 14 (1.94) |
| 5/16 - 18 | 17 (2.35) | 19 (2.63) | 24 (3.32) |
| - 24 | 19 (2.63) | | 27 (3.73) |
| 3/8 - 16 | 31 (4.29) | 34 (4.70) | 44 (6.09) |
| - 24 | 35 (4.84) | | 49 (6.78) |
| 7/16 - 14 | 49 (6.78) | 55 (7.61) | 70 (9.68) |
| - 20 | 55 (7.61) | | 78 (10.79) |
| 1/2 - 13 | 75 (10.37) | 85 (11.76) | 105 (14.52) |
| - 20 | 85 (11.76) | | 120 (16.60) |
| 9/16 - 12 | 110 (15.21) | 120 (16.60) | 155 (21.44) |
| - 18 | 120 (16.60) | | 170 (23.51) |
| 5/8 - 11 | 150 (20.75) | 167 (23.10) | 210 (29.04) |
| - 18 | 170 (23.51) | | 240 (33.19) |
| 3/4 - 10 | 270 (37.34) | 280 (38.72) | 375 (51.86) |
| - 16 | 295 (40.80) | | 420 (58.09) |
| 7/8 - 9 | 395 (54.63) | 440 (60.85) | 605 (83.67) |
| - 14 | 435 (60.16) | | 675 (93.35) |
| 1 - 8 | 590 (81.60) | 660 (91.28) | 910 (125.85) |
| - 14 | 660 (91.28) | | 990 (136.92) |

*NOTES:*

1. *Always use the torque values listed above when specific torque values are not available.*
2. *The above is based on use of clean, dry threads.*
3. *Reduce torque by 10% when engine oil is used as a lubricant.*
4. *Reduce torque by 20% if new plated capscrews are used.*
5. *General Formula for calculating Torques is as follows: Torque in Inch Lbs. = .2 x Nominal Diameter of Screw x Loads in Lbs., where Load = 80% of Yield Strength, expressed in Lbs., not pounds per square inch.*

SECTION 1

# OUTER FRAME - SINGLE SIDE ROLLERS

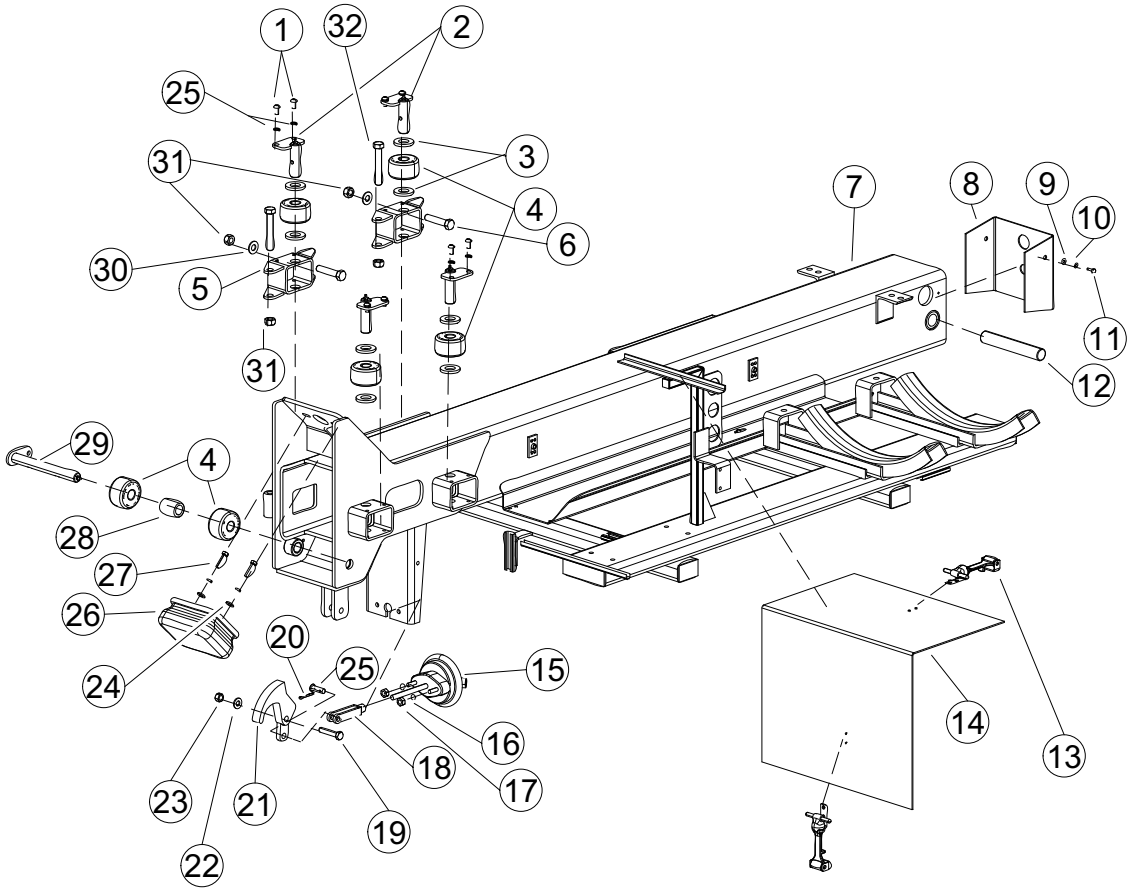

# OUTER FRAME - SINGLE SIDE ROLLERS

| REF. NO. | PART NO. | DESCRIPTION | QTY. |
|---|---|---|---|
| 1 | QUB03365 | BOLT | 8 |
| 2 | 0750-772 | PIN | 4 |
| 3 | 0750-699 | WASHER | 8 |
| 4 | QUR00910 | ROLLER | 6 |
| 5 | 0750-688 | BRACKET, Roller - Adjustable | 2 |
| 6 | QUB05885 | BOLT | 2 |
| 7 | 87367 | WELDMENT, Outer Frame | 1 |
| 8 | 0750-754 | COVER | 1 |
| 9 | QUR01700 | WASHER | 2 |
| 10 | QUR01260 | WASHER | 2 |
| 11 | QUB02000 | BOLT | 2 |
| 12 | 0750-770 | PIN | 1 |
| 13 | QUP01452 | LATCH, Rubber | 2 |
| 14 | 0751-068 | COVER, Valve | 1 |
| 15 | 0085-768 | ACTUATOR, Pneumatic | 1 |
| 16 | QUR01280 | WASHER | 2 |
| 17 | QUE00470 | NUT | 2 |
| 18 | QUY00485 | CLEVIS | 1 |
| 19 | QUB04800 | BOLT | 1 |
| 20 | QUP03600 | PIN, Cotter | 1 |
| 21 | 0750-884 | LATCH HOOK | 1 |
| 22 | QUR01910 | WASHER | 1 |
| 23 | QUE00500 | NUT | 1 |
| 24 | QUR01585 | WASHER | 2 |
| 25 | QUP02130 | PIN, Clevis | 1 |
| 26 | QUB01390 | BUMPER | 1 |
| 27 | QUB06200 | BOLT | 2 |
| 28 | 0750-771 | SPACER | 1 |
| 29 | 0750-775 | PIN | 1 |
| 30 | QUR01960 | WASHER | 2 |
| 31 | QUE02415 | NUT | 4 |

SECTION 1

# OUTER FRAME - DUAL SIDE ROLLERS

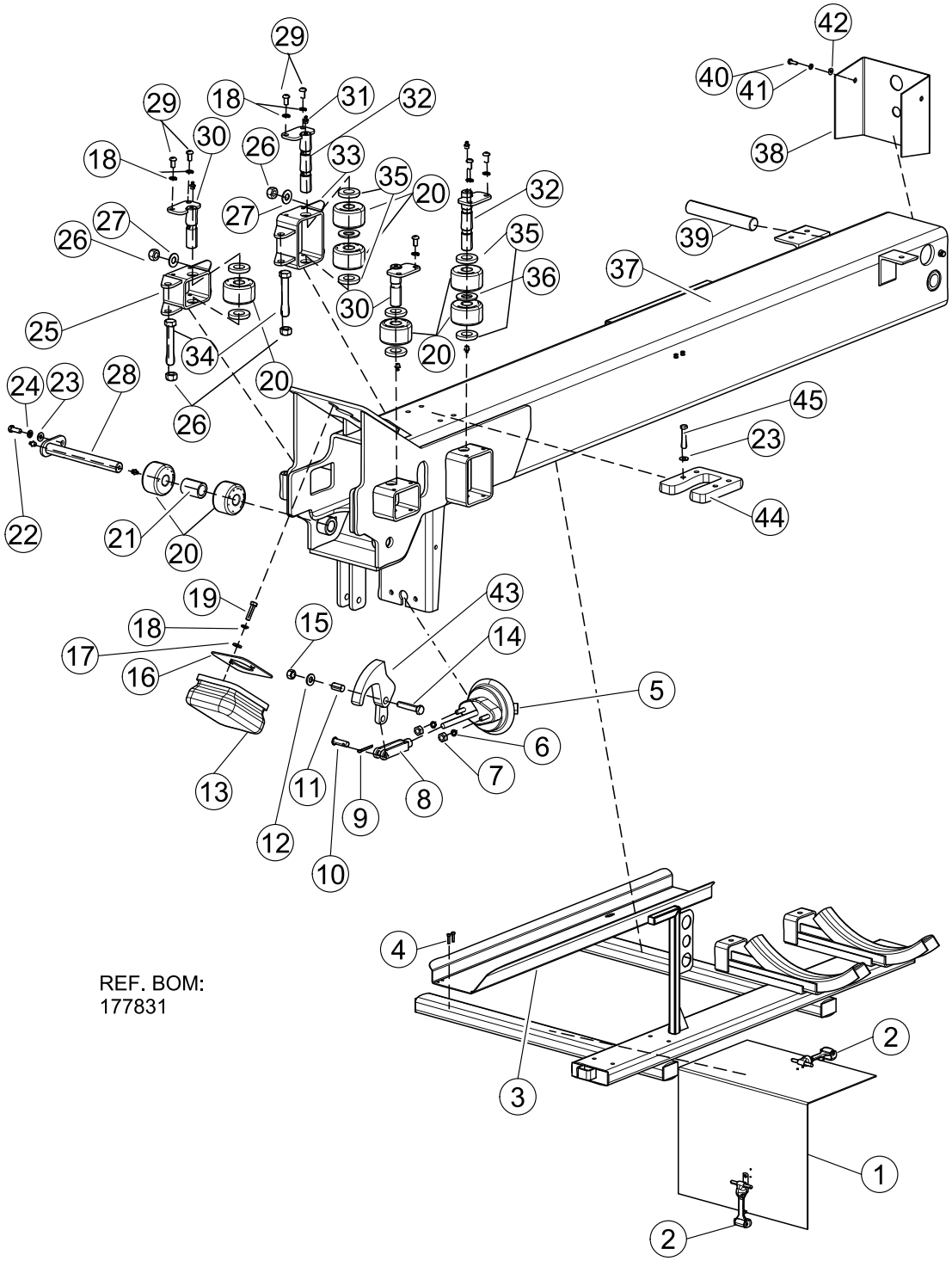

# OUTER FRAME - DUAL SIDE ROLLERS

| REF. NO. | PART NO. | DESCRIPTION | QTY. |
|---|---|---|---|
| 1 | 0751-268 | COVER, Valve | 1 |
| | QUC02000 | EDGE PROTECTION (Not Shown) | PER INCH |
| 2 | QUP01452 | LATCH, Rubber | 2 |
| 3 | 0750-752 | TROUGH, Hose | 1 |
| 4 | QUV02771 | BOLT | 8 |
| 5 | 0085-768 | ACTUATOR, Pneumatic | 1 |
| 6 | QUR01280 | WASHER | 2 |
| 7 | QUE00470 | NUT | 2 |
| 8 | QUY00485 | CLEVIS | 1 |
| 9 | QUP03600 | PIN, Cotter | 1 |
| 10 | QUP02130 | PIN, Clevis | 1 |
| 11 | 168936 | BUSHING | 1 |
| 12 | QUR01910 | WASHER | 1 |
| 13 | 0750-755 | BUMPER, Rubber | 1 |
| 14 | QUB04800 | PIN | 1 |
| 15 | QUE00500 | NUT | 1 |
| 16 | 163419 | SHIM (10 Ga. /.141”) | AS REQUIRED |
| 17 | QUR01585 | WASHER | 2 |
| 18 | QUR01275 | WASHER | 10 |
| 19 | QUB06200 | BOLT | 2 |
| 20 | QUR00910 | ROLLER | 8 |
| 21 | 0750-771 | SPACER | 1 |
| 22 | QUB03401 | BOLT | 1 |
| 23 | QUR01902 | WASHER | 5 |
| 24 | QUR01272 | WASHER | 1 |
| 25 | 0750-688 | BRACKET, Single Roller - Adjustable | 1 |
| 26 | QUE02415 | NUT | 6 |
| 27 | QUR01960 | WASHER | 4 |
| 28 | 0750-775 | PIN | 1 |
| 29 | QUB03365 | BOLT | 8 |
| 30 | 0750-772 | PIN | 2 |
| 31 | QUG00200 | FITTING, Grease | 4 |
| 32 | 177854 | PIN | 2 |
| 33 | 177853 | BRACKET, Dual Roller - Adjustable | 1 |
| 34 | QUB05301 | BOLT | 2 |
| 35 | 0750-699 | SPACER | 8 |
| 36 | QUR02101 | WASHER | 2 |
| 37 | 177838 | WELDMENT, Outer Frame | 1 |
| 38 | 0750-754 | COVER | 1 |
| 39 | 0750-770 | PIN | 1 |
| 40 | QUB02000 | BOLT | 2 |
| 41 | QUR01260 | WASHER | 2 |
| 42 | QUR01700 | WASHER | 2 |
| 43 | 0750-884 | HOOK, Latch | 1 |
| 44 | 164322 | STOP | 1 |
| 45 | QUB03802 | BOLT | 4 |

SECTION 1

# INNER FRAME/ARM

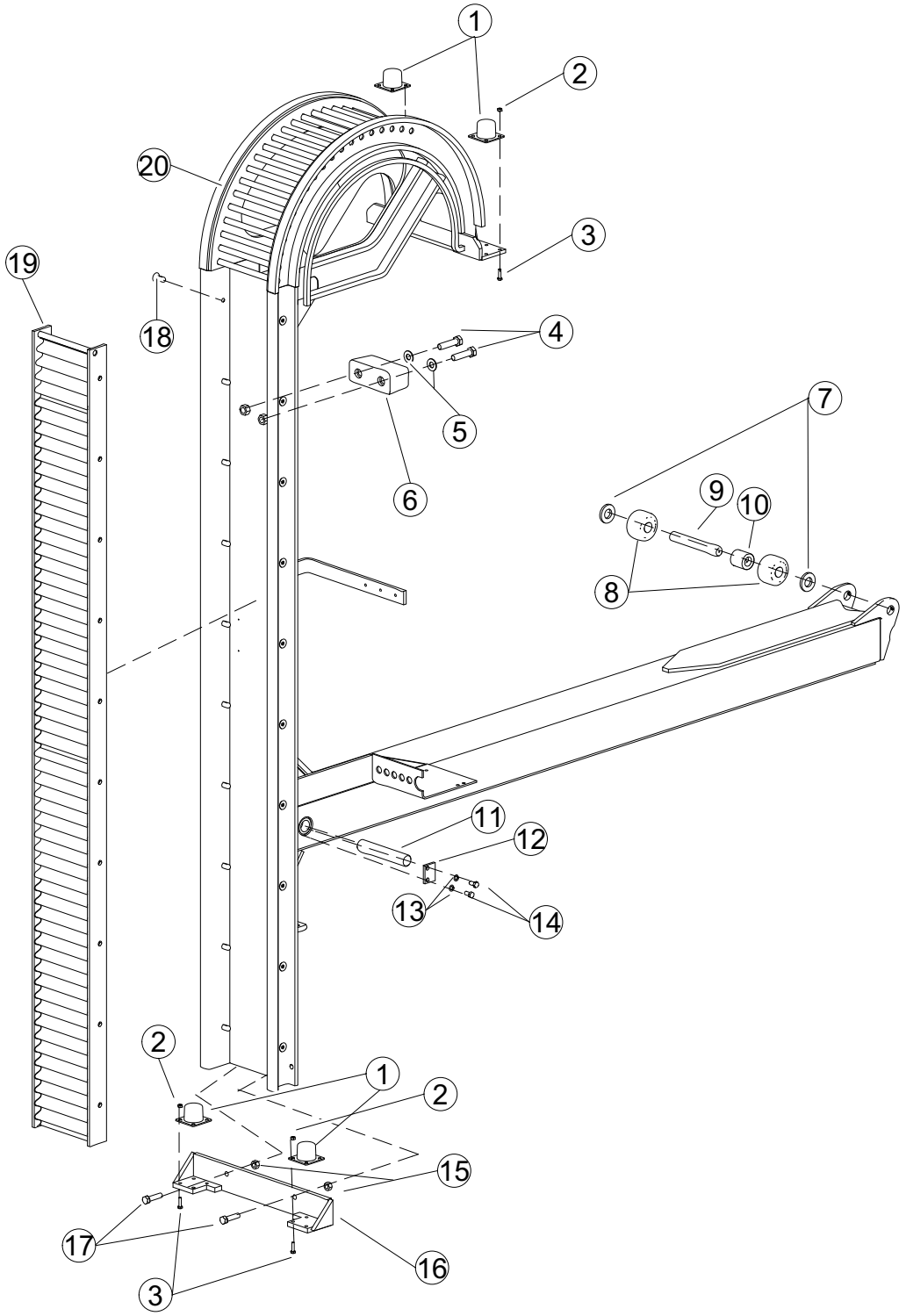

# INNER FRAME/ARM

| REF. NO. | PART NO. | DESCRIPTION | QTY. |
|---|---|---|---|
| 1 | QUB00089 | BUMPER, Stop | 4 |
| 2 | QUE02370 | NUT | 16 |
| 3 | QUB02100 | BOLT | 16 |
| 4 | QUB06290 | BOLT | 2 |
| 5 | QUR01960 | WASHER | 2 |
| 6 | QUB09500 | BUMPER | 1 |
| 7 | 0750-699 | WASHER | 2 |
| 8 | QUR00910 | ROLLER | 2 |
| 9 | 0750-700 | PIN | 1 |
| 10 | 0750-701 | SPACER | 1 |
| 11 | 0750-698 | PIN | 1 |
| 12 | 0992-598 | PLATE, Retainer | 1 |
| 13 | QUB03360 | BOLT | 2 |
| 14 | QUR01275 | WASHER | 2 |
| 15 | QUE02383 | NUT | 2 |
| 16 | 0992-430 | BRACKET | 1 |
| 17 | QUB06250 | BOLT | 2 |
| 18 | QUB05650 | BOLT | 20 |
| 19 | 0992-411 | RACK, GEAR | 1 |
| 20 | 0992-451 | FRAME (INCLUDES 0992-411) | 1 |

# INNER FRAME/ARM - S/N AG14701NVI and After

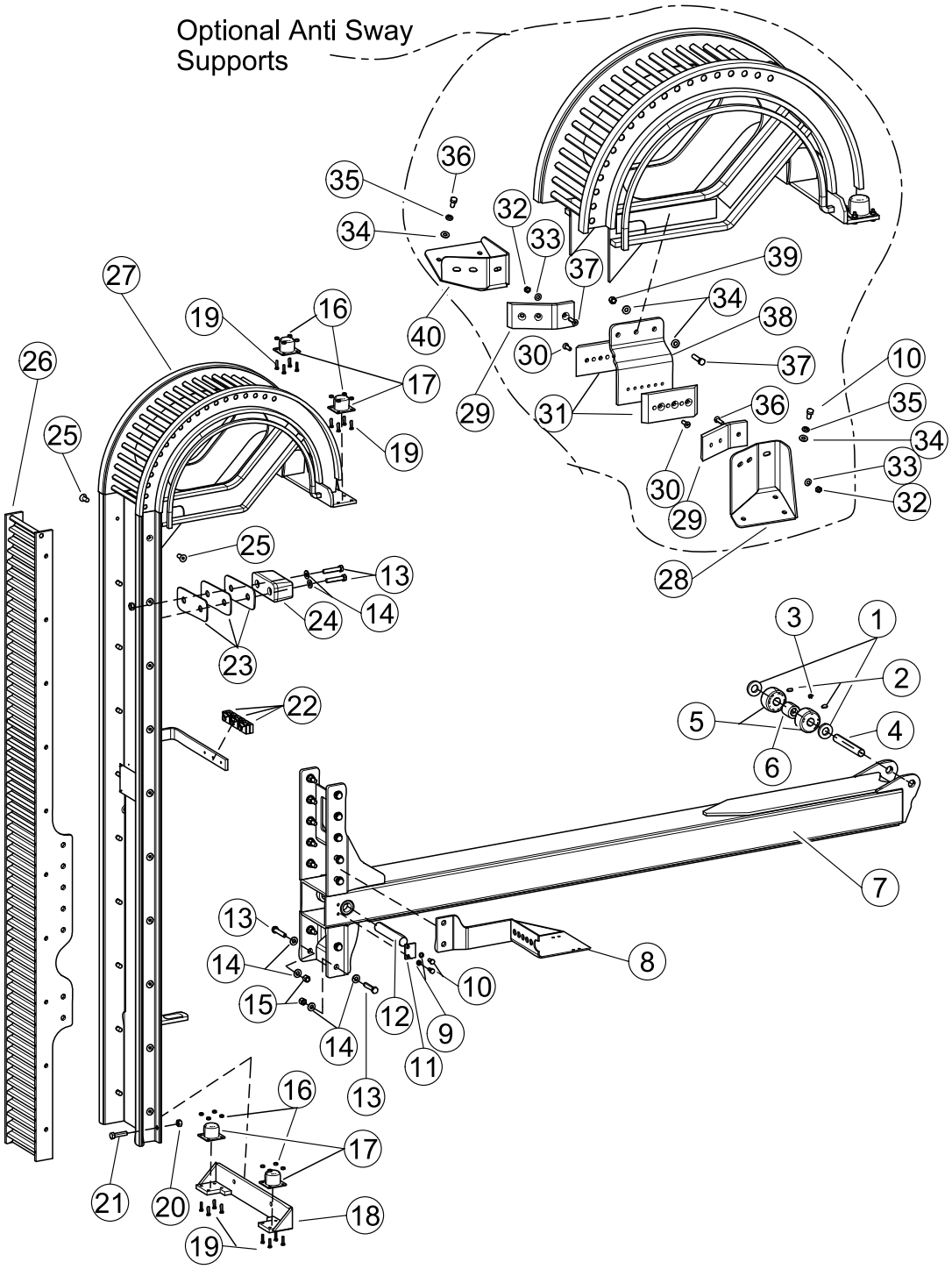

# INNER FRAME/ARM - S/N AG14701NVI and After

| REF. NO. | PART NO. | DESCRIPTION | QTY. |
|---|---|---|---|
| 1 | 0750-699 | WASHER | 2 |
| 2 | QUV02840 | SETSCREW | 2 |
| 3 | QUG00200 | FITTING, Grease | 1 |
| 4 | 0750-700 | PIN | 1 |
| 5 | QUR00910 | ROLLER | 2 |
| 6 | 0750-701 | SPACER | 1 |
| 7 | 177847 | INNER TUBE | 1 |
| 8 | 180806 | BRACKET, Hose | 1 |
| 9 | QUR01275 | WASHER | 2 |
| 10 | QUB03360 | BOLT | 8 |
| 11 | 0992-598 | RETAINER | 1 |
| 12 | 0750-698 | PIN | 1 |
| 13 | QUB04801 | BOLT | 16 |
| 14 | QUB01912 | WASHER | 30 |
| 15 | QUE01500 | NUT | 14 |
| 16 | QUE02370 | NUT | 16 |
| 17 | QUB00089 | STOP, Rubber | 4 |
| 18 | 0992-430 | BRACKET | 1 |
| 19 | QUB02100 | BOLT | 16 |
| 20 | QUE02383 | NUT | 2 |
| 21 | QUB06250 | BOLT | 2 |
| 22 | HYS00602 | SUPPORT, Tube | 3 |
| 23 | 164318 | SPACER - 10 ga./.141” | A/R |
| 24 | QUB00095 | STOP, Rubber | 1 |
| 25 | QUB05650 | BOLT | 20 |
| 26 | 177841 | RACK, Gear | 1 |
| 27 | 177834 | WELDMENT, Track - (Includes P/N 177841 Gear Rack) | 1 |
| 28 | 177903 | BRACKET | 1 |
| 29 | 177906 | PLATE, Wear - Plastic | 2 |
| 30 | QUV02606 | BOLT | 6 |
| 31 | 177905 | PLATE, Wear - Plastic | 2 |
| 32 | QUE01205 | NUT | 6 |
| 33 | QUR01800 | WASHER | 6 |
| 34 | QUR01902 | WASHER | 12 |
| 35 | QUR01272 | WASHER | 6 |
| 36 | QUV02622 | BOLT | 6 |
| 37 | QUB03730 | BOLT | 3 |
| 38 | 177904 | BRACKET | 1 |
| 39 | QUE01302 | NUT | 3 |
| 40 | 177902 | BRACKET | 1 |

# GRABBER ASSEMBLY - BELT STYLE

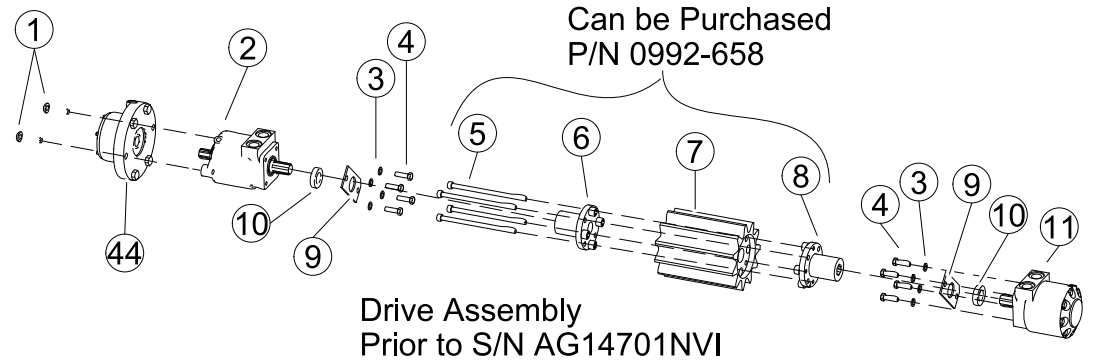


Note: Items 5, 6 ,7 & 8 cannot be replaced by individual "new style "parts. You can replace the assembly 0992-658 with 176153 to have current production parts on older units (This is the recommended procedure) These parts are shown on "Grabber Assy. S/N AG14701NVI and after.

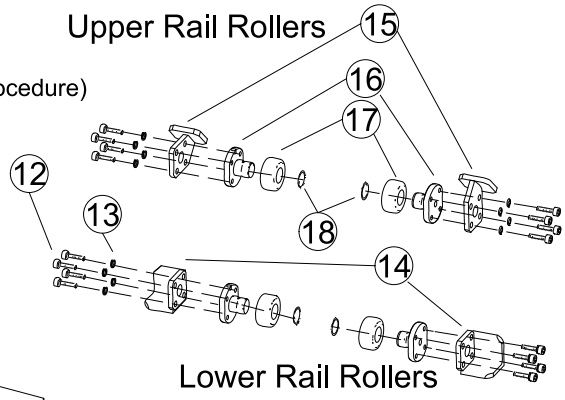


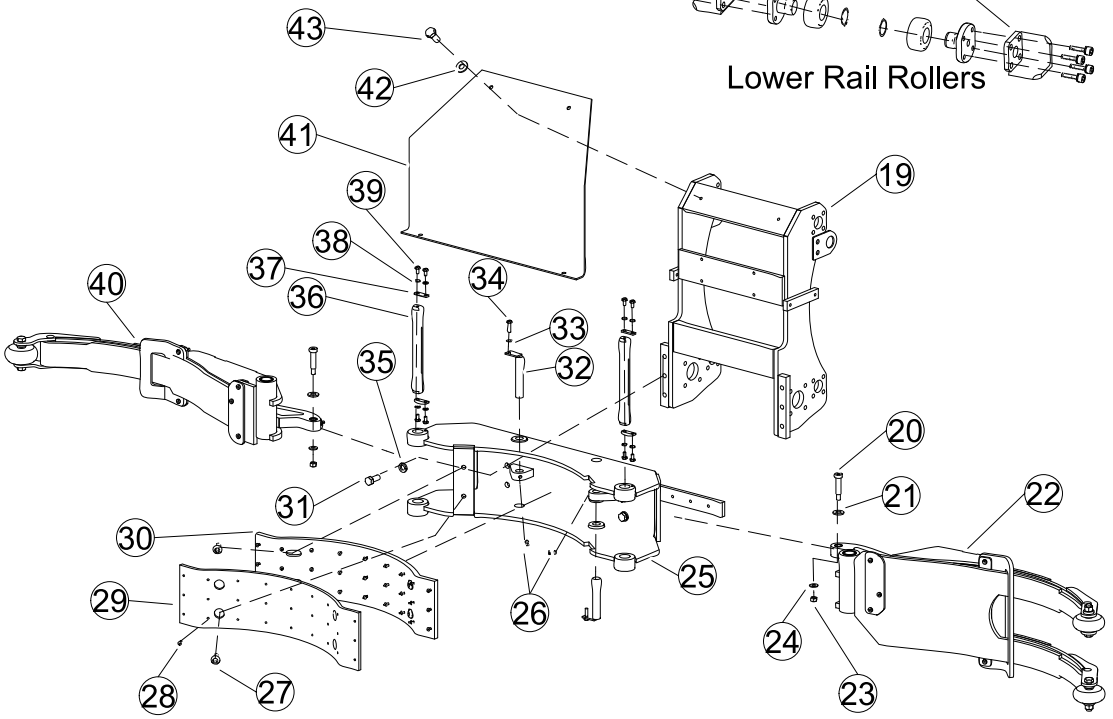

See Seperate Pages for Detailed Item 40 and 22

# GRABBER ASSEMBLY - BELT STYLE

| REF. NO. | PART NO. | DESCRIPTION | QTY. |
|---|---|---|---|
| 1 | QUB05820 | BOLT | 2 |
| 2 | 0039-212 | MOTOR | 1 |
| 3 | QUR01272 | WASHER | 8 |
| 4 | QUB03501 | BOLT | 8 |
| 5 | QUV02772 | BOLT | 4 |
| 6 | 0992-192 | HUB | 1 |
| 7 | 0992-218 | GEAR | 1 |
| 8 | 0992-191 | HUB | 1 |
| 9 | 0992-429 | PLATE, RETAINER | 2 |
| 10 | QUR00625 | BEARING | 2 |
| 11 | 0039-211 | MOTOR | 1 |
| 12 | QUV10970 | BOLT | 16 |
| 13 | QUR02120 | WASHER | 16 |
| 14 | 0992-426 | BRACKET | 2 |
| 15 | 0992-421 | BRACKET | 2 |
| 16 | 0992-435 | HUB, Roller | 4 |
| 17 | 0044-523 | ROLLER | 4 |
| 18 | 0045-111 | RING, Retainer | 4 |
| | 0992-432 | ROLLER Assy. - Includes Items 16, 17 & 18 | 4 |
| 19 | 0992-630 | FRAME, Grabber | 1 |
| 20 | QUB05465 | BOLT | 2 |
| 21 | QUR01912 | WASHER | 2 |
| 22 | 154336 | GRABBER, Double - Complete | 1 |
| 23 | QUE01997 | NUT | 2 |
| 24 | QUR01902 | WASHER | 2 |
| 25 | 154351 | FRAME, Grabber - Cylinders | 1 |
| 26 | QUV02856 | SETSCREW | 2 |
| 27 | QUB05640 | BOLT | 4 |
| 28 | QUR02167 | RIVET | 27 |
| 29 | 0992-593 | PAD, Rubber | 1 |
| 30 | 0992-577 | BRACKET, Pad | 1 |
| 31 | QUB04414 | BOLT | 6 |
| 32 | 0992-597 | PIN, Cylinder | 2 |
| 33 | QUR01695 | WASHER | 2 |
| 34 | QUB02120 | BOLT | 2 |
| 35 | QUR01300 | WASHER | 6 |
| 36 | 154353 | PIN, Cylinder | 2 |
| 37 | 154354 | PLATE, Retainer | 4 |
| 38 | QUR01260 | WASHER | 8 |
| 39 | QUB01899 | BOLT | 8 |
| 40 | 154327 | GRABBER, Single - Complete | 1 |
| 41 | 0992-625 | COVER | 1 |
| 42 | QUR01800 | WASHER | 6 |
| 43 | QUB02701 | BOLT | 6 |
| 44 | 0044-285 | BRAKE HOUSING | 1 |

# GRABBER ASSEMBLY - BELT STYLE - After S/N AG14701NVI

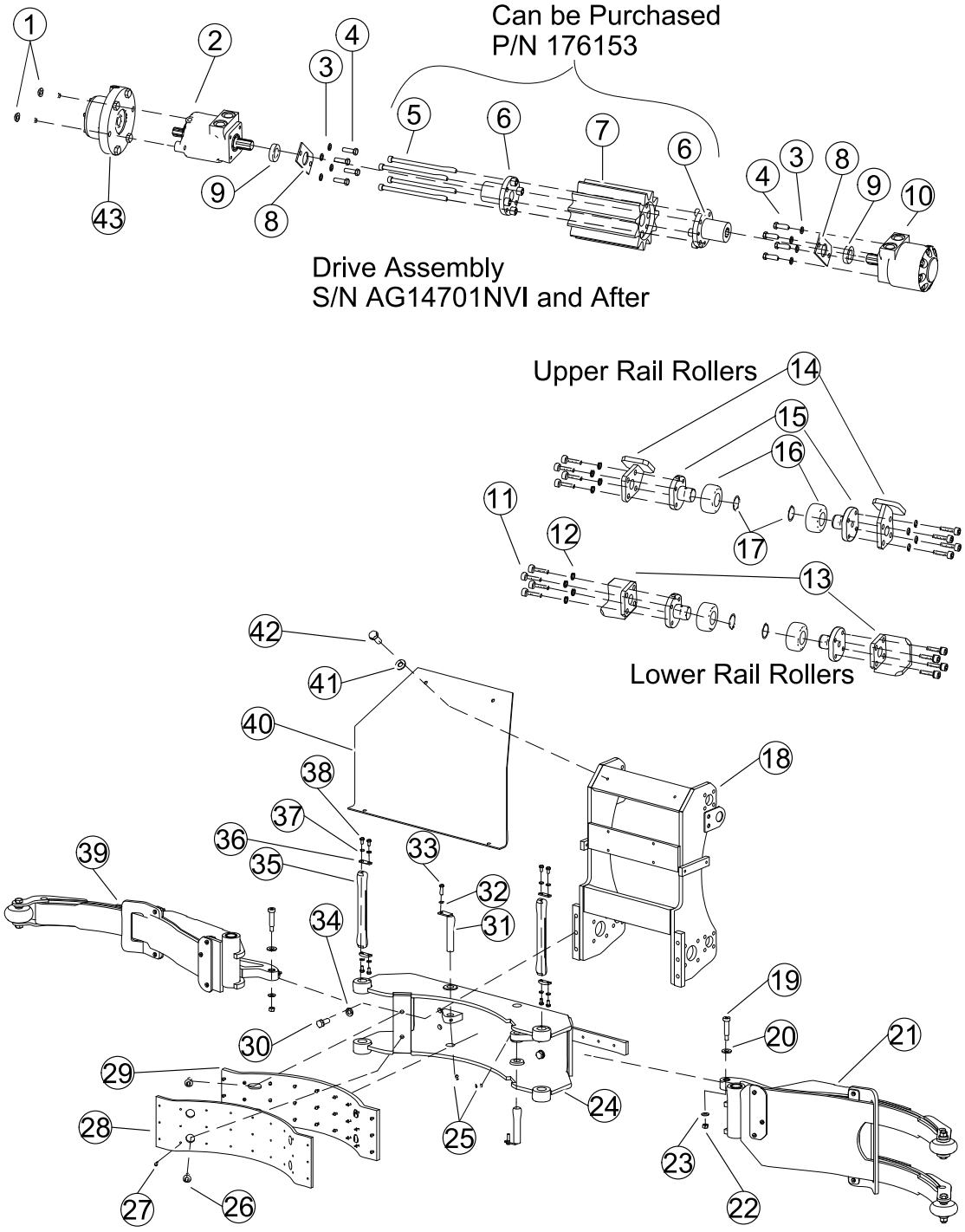


See Seperate Pages for Detailed Item 39 and 21

# GRABBER ASSEMBLY - BELT STYLE - After S/N AG14701NVI

| REF. NO. | PART NO. | DESCRIPTION | QTY. |
|---|---|---|---|
| 1 | QUB05820 | BOLT | 2 |
| 2 | 0039-212 | MOTOR | 1 |
| 3 | QUR01272 | WASHER | 8 |
| 4 | QUB03501 | BOLT | 8 |
| 5 | QUV02772 | BOLT | 4 |
| 6 | 176151 | HUB | 2 |
| 7 | 176150 | GEAR | 1 |
| 8 | 0992-429 | PLATE, RETAINER | 2 |
| 9 | QUR00625 | BEARING | 2 |
| 10 | 0039-211 | MOTOR | 1 |
| 11 | QUV10970 | BOLT | 16 |
| 12 | QUR02120 | WASHER | 16 |
| 13 | 0992-426 | BRACKET | 2 |
| 14 | 0992-421 | BRACKET | 2 |
| 15 | 0992-435 | HUB, Roller | 4 |
| 16 | 0044-523 | ROLLER | 4 |
| 17 | 0045-111 | RING, Retainer | 4 |
| | 0992-432 | ROLLER Assy. - Includes Items 16, 17 & 18 | 4 |
| 18 | 0992-630 | FRAME, Grabber | 1 |
| 19 | QUB05465 | BOLT | 2 |
| 20 | QUR01912 | WASHER | 2 |
| 21 | 154336 | GRABBER, Double - Complete | 1 |
| 22 | QUE01997 | NUT | 2 |
| 23 | QUR01902 | WASHER | 2 |
| 24 | 154351 | FRAME, Grabber - Cylinders | 1 |
| 25 | QUV02856 | SETSCREW | 2 |
| 26 | QUB05640 | BOLT | 4 |
| 27 | QUR02167 | RIVET | 27 |
| 28 | 0992-593 | PAD, Rubber | 1 |
| 29 | 0992-577 | BRACKET, Pad | 1 |
| 30 | QUB04414 | BOLT | 6 |
| 31 | 0992-597 | PIN, Cylinder | 2 |
| 32 | QUR01695 | WASHER | 2 |
| 33 | QUB02120 | BOLT | 2 |
| 34 | QUR01300 | WASHER | 6 |
| 35 | 154353 | PIN, Cylinder | 2 |
| 36 | 154354 | PLATE, Retainer | 4 |
| 37 | QUR01260 | WASHER | 8 |
| 38 | QUB01899 | BOLT | 8 |
| 39 | 154327 | GRABBER, Single - Complete | 1 |
| 40 | 0992-625 | COVER | 1 |
| 41 | QUR01800 | WASHER | 6 |
| 42 | QUB02701 | BOLT | 6 |
| 43 | 0044-285 | BRAKE HOUSING | 1 |

# GRABBER FINGER - SINGLE BELT STYLE

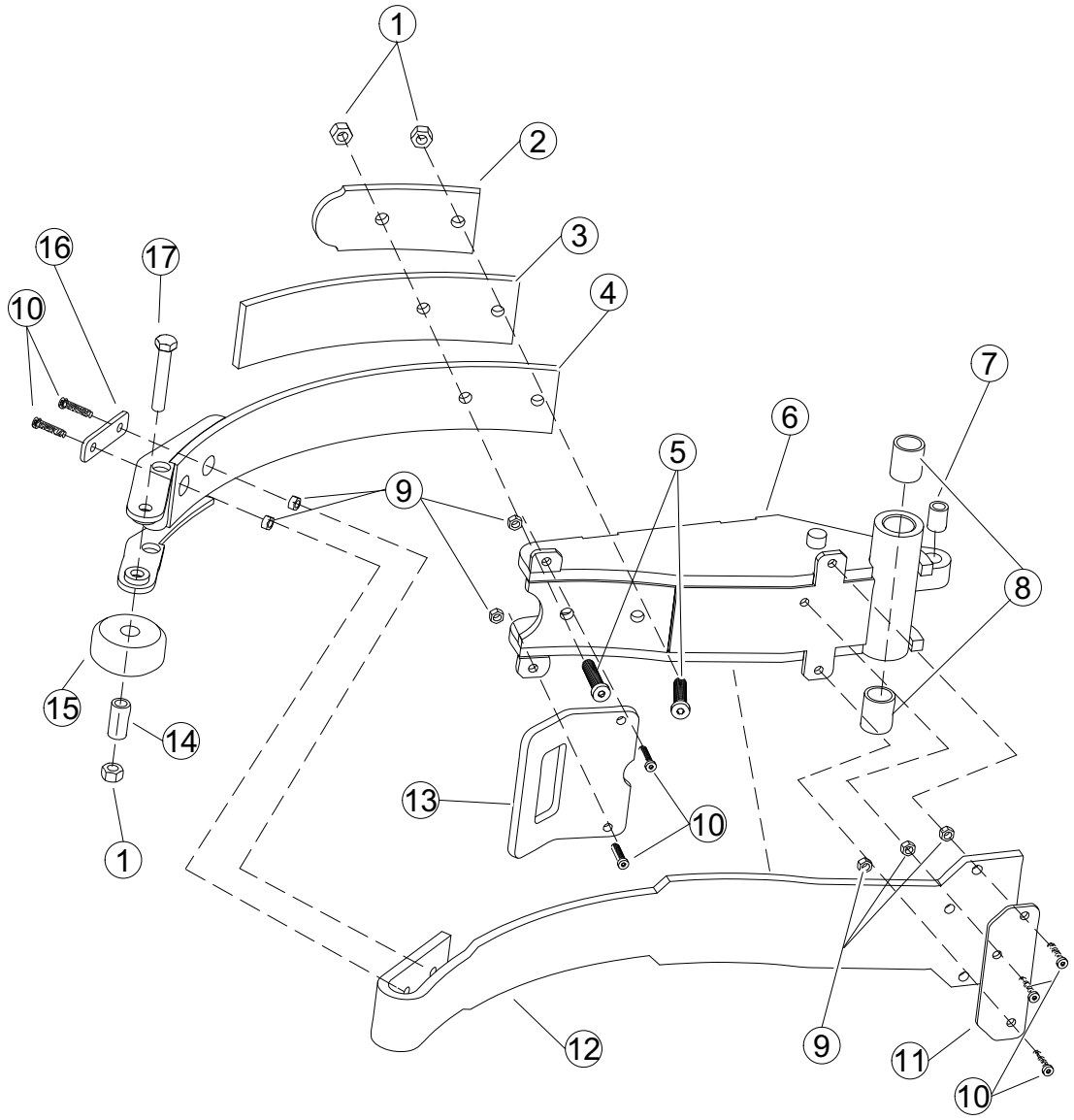

# GRABBER FINGER - SINGLE BELT STYLE

| REF. NO. | PART NO. | DESCRIPTION | QTY. |
|---|---|---|---|
| 1 | QUE02383 | NUT | 3 |
| 2 | 154304 | SPRING, Back Up | 1 |
| 3 | 154357 | SPRING | 1 |
| 4 | 154341 | ARM, Pivot | 1 |
| 5 | QUB24996 | BOLT | 2 |
| 6 | 154316 | PIVOT - Single | 1 |
| 7 | 154349 | BUSHING | 1 |
| 8 | 154348 | BUSHING | 2 |
| 9 | QUE02378 | NUT | 6 |
| 10 | QUV02777 | BOLT | 7 |
| 11 | 154340 | PLATE | 1 |
| 12 | 154346 | BELT | 1 |
| 13 | 154347 | GUARD | 1 |
| 14 | QUB00652 | SPACER | 1 |
| 15 | 154345 | ROLLER | 1 |
| 16 | 154338 | PLATE | 1 |
| 17 | QUB04828 | BOLT | 1 |
| | 154327 | GRABBER - Single - Complete (All of the Above Parts) | 1 |

# GRABBER FINGER - DUAL BELT STYLE

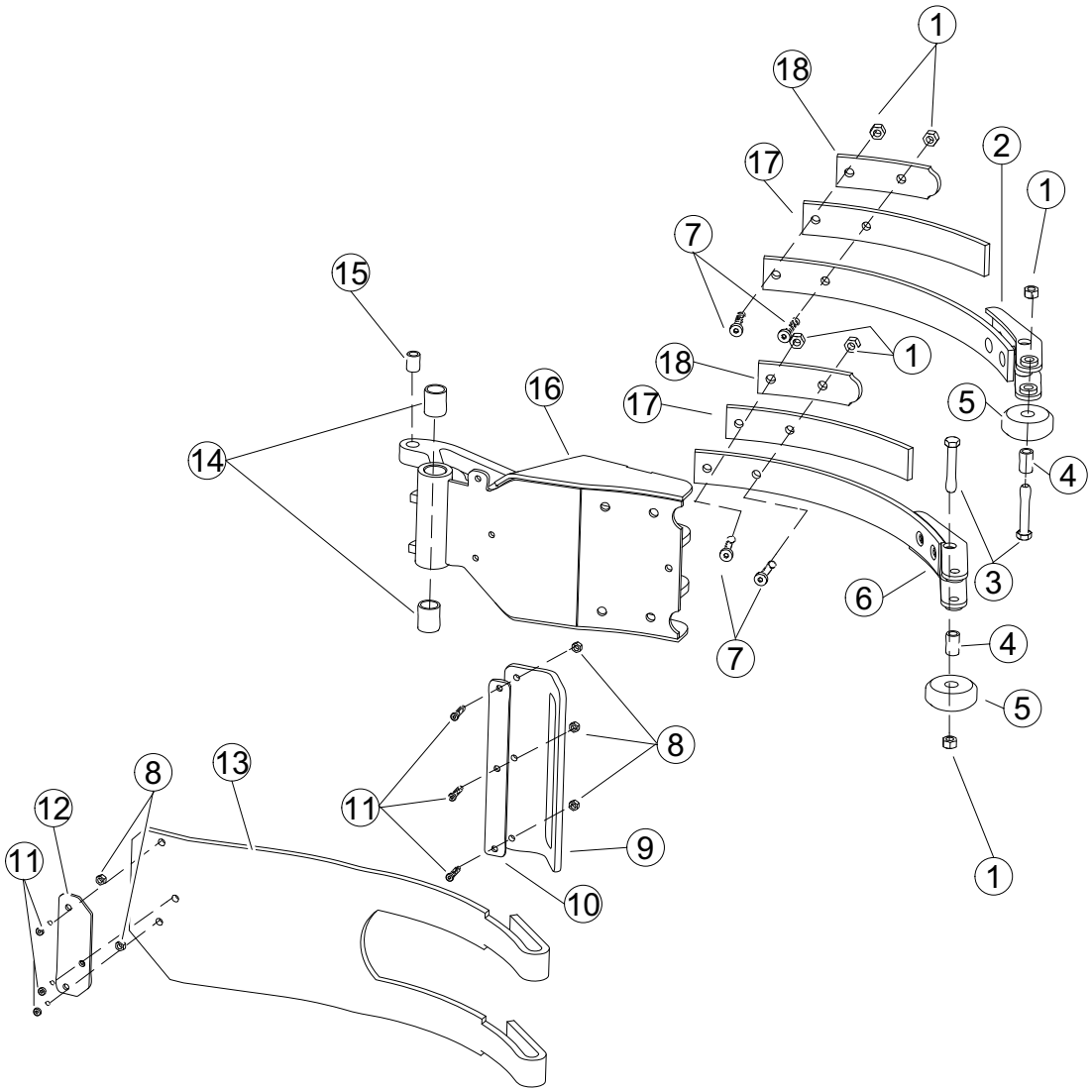

# GRABBER FINGER - DUAL BELT STYLE

| REF. NO. | PART NO. | DESCRIPTION | QTY. |
|---|---|---|---|
| 1 | QUE02383 | NUT | 6 |
| 2 | 154308 | ARM, Pivot - Upper | 1 |
| 3 | QUB04828 | BOLT | 2 |
| 4 | QUB00651 | SPACER | 2 |
| 5 | 154307 | ROLLER | 2 |
| 6 | 154324 | ARM, Pivot - Lower | 1 |
| 7 | QUB24996 | BOLT | 4 |
| 8 | QUE02378 | NUT | 5 |
| 9 | 154303 | GUARD | 1 |
| 10 | 154306 | PLATE, Retainer | 1 |
| 11 | QUV02777 | BOLT | 6 |
| 12 | 154340 | PLATE | 1 |
| 13 | 154339 | BELT | 1 |
| 14 | 154348 | BUSHING | 2 |
| 15 | 154349 | BUSHING | 1 |
| 16 | 154328 | PIVOT - Dual | 1 |
| 17 | 154337 | SPRING | 2 |
| 18 | 154305 | SPRING, Back Up | 2 |
| | 154336 | GRABBER - Dual - Complete (All of the Above Parts) | 1 |

# GRABBER ASSEMBLY - “RAV STYLE”

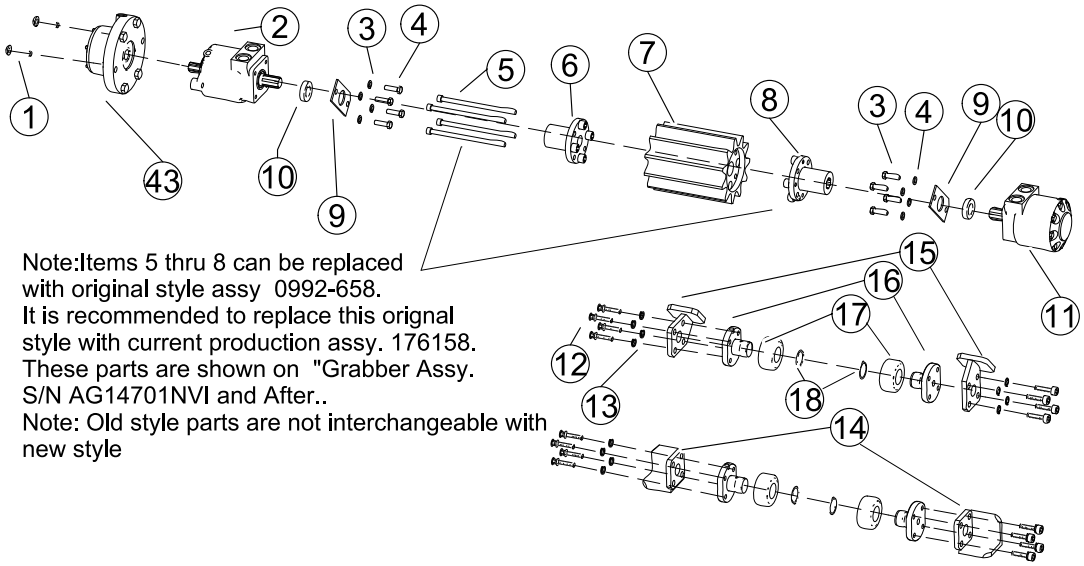


Note:Items 5 thru 8 can be replaced
with original style assy 0992-658.
It is recommended to replace this orignal
style with current production assy. 176158.
These parts are shown on "Grabber Assy.
S/N AG14701NVI and After..
Note: Old style parts are not interchangeable with
new style

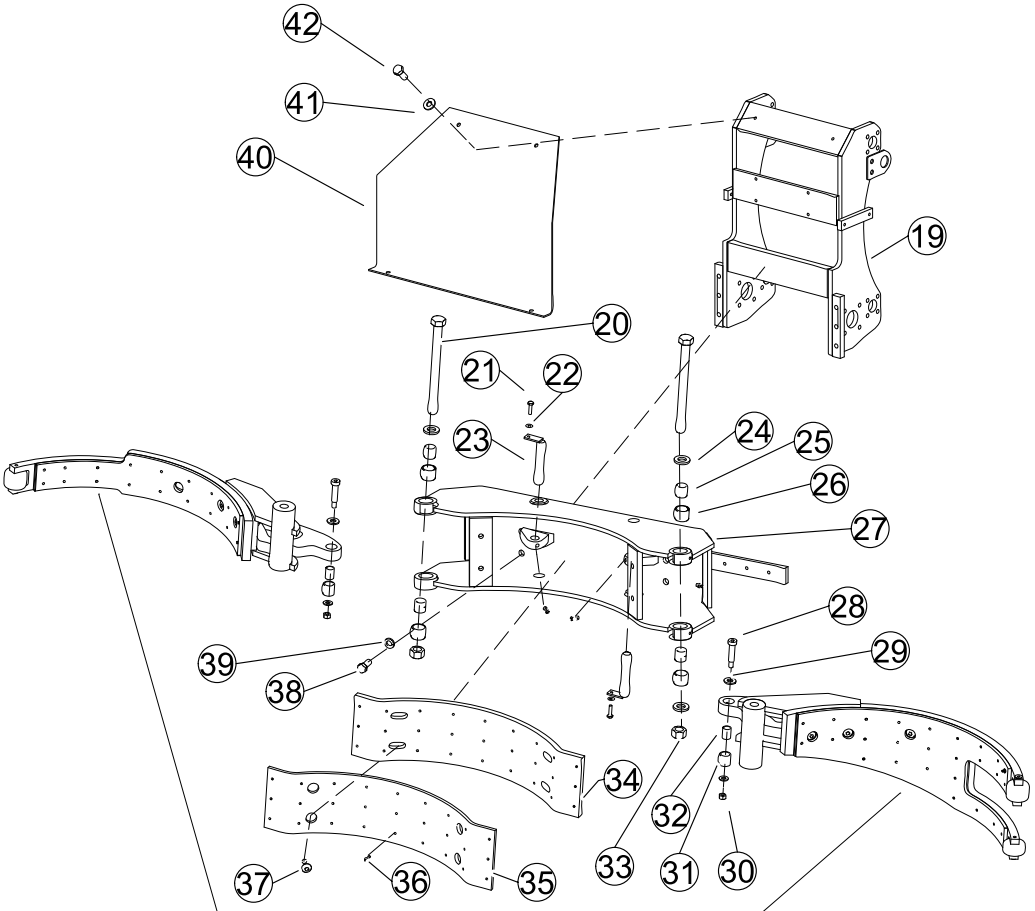


See Seperate Pages for Finger Details

# GRABBER ASSEMBLY - “RAV STYLE”

| REF. NO. | PART NO. | DESCRIPTION | QTY. |
|---|---|---|---|
| 1 | QUB05820 | BOLT | 2 |
| 2 | 0039-212 | MOTOR | 1 |
| 3 | QUR01272 | WASHER | 8 |
| 4 | QUB03501 | BOLT | 8 |
| 5 | QUV02772 | BOLT | 4 |
| 6 | 0992-192 | HUB | 1 |
| 7 | 0992-218 | GEAR | 1 |
| 8 | 0992-191 | HUB | 1 |
| 9 | 0992-429 | PLATE, RETAINER | 2 |
| 10 | QUR00625 | BEARING | 2 |
| 11 | 0039-211 | MOTOR | 1 |
| 12 | QUV10970 | BOLT | 16 |
| 13 | QUR02120 | WASHER | 16 |
| 14 | 0992-426 | BRACKET | 2 |
| 15 | 0992-421 | BRACKET | 2 |
| 16 | 0992-435 | HUB, Roller | 4 |
| 17 | 0044-523 | ROLLER | 4 |
| 18 | 0045-111 | RING, Retainer | 4 |
| 19 | 0992-630 | FRAME, Grabber | 1 |
| 20 | QUB14040 | BOLT | 2 |
| 21 | QUB02120 | BOLT | 2 |
| 22 | QUR01695 | WASHER | 2 |
| 23 | 0992-597 | PIN, Cylinder | 2 |
| 24 | QUR02830 | WASHER | 4 |
| 25 | QUB00240 | BUSHING | 4 |
| 26 | QUB00599 | BUSHING | 4 |
| 27 | 0992-573 | FRAME, Grabber | 1 |
| 28 | QUB05465 | BOLT | 2 |
| 29 | QUR01912 | WASHER | 4 |
| 30 | QUE01997 | NUT | 2 |
| 31 | QUB00595 | BUSHING | 2 |
| 32 | QUB00235 | BUSHING | 2 |
| 33 | QUE00894 | NUT | 2 |
| 34 | 0992-577 | BRACKET, Pad | 1 |
| 35 | 0992-593 | PAD, Rubber | 1 |
| 36 | QUR02167 | RIVET | 27 |
| 37 | QUB05640 | BOLT | 4 |
| 38 | QUB04414 | BOLT | 6 |
| 39 | QUR01300 | WASHER | 6 |
| 40 | 0992-625 | COVER | 1 |
| 41 | QUR01800 | WASHER | 6 |
| 42 | QUB02701 | BOLT | 6 |
| 43 | 0044-285 | BRAKE HOUSING | 1 |

# GRABBER FINGER - DOUBLE - “RAV STYLE”

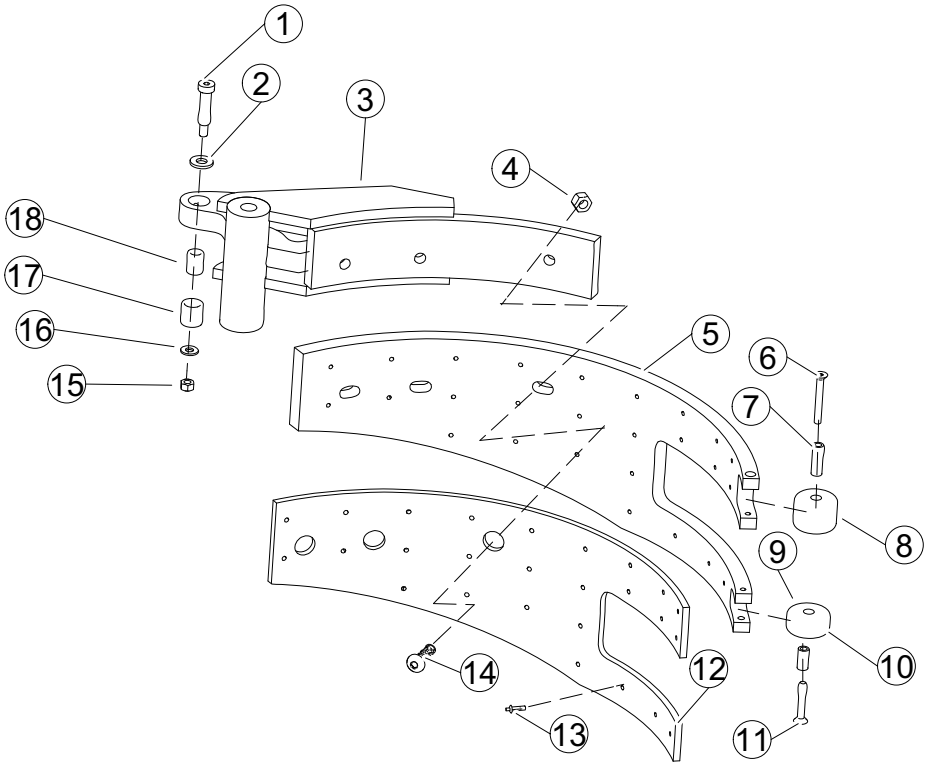


| REF. NO. | PART NO. | DESCRIPTION | QTY. |
|---|---|---|---|
| 1 | QUB05465 | BOLT | 1 |
| 2 | QUR01912 | WASHER | 1 |
| 3 | 0992-586 | PIVOT | 1 |
| 4 | QUE02383 | NUT | 3 |
| 5 | 0992-585 | ARM - Dual | 1 |
| 6 | QUB03218 | BOLT | 1 |
| 7 | QUB00643 | BUSHING | 1 |
| 8 | 0992-590 | ROLLER- Upper | 1 |
| 9 | 0992-591 | ROLLER - Lower | 1 |
| 10 | QUB00642 | BUSHING | 1 |
| 11 | QUB03110 | BOLT | 1 |
| 12 | 0992-594 | LINER, Rubber - Dual | 1 |
| 13 | QUR02167 | RIVET | 26 |
| 14 | QUB05820 | BOLT | 3 |
| 15 | QUE01997 | NUT | 1 |
| 16 | QUR01902 | WASHER | 1 |
| 17 | QUB00595 | BUSHING | 1 |
| 18 | QUB00235 | BUSHING | 1 |
| | 0992-683 | ARM ASSEMBLY - Includes Items 5, 12 & 13 | 1 |

# GRABBER FINGER - SINGLE - “RAV STYLE”

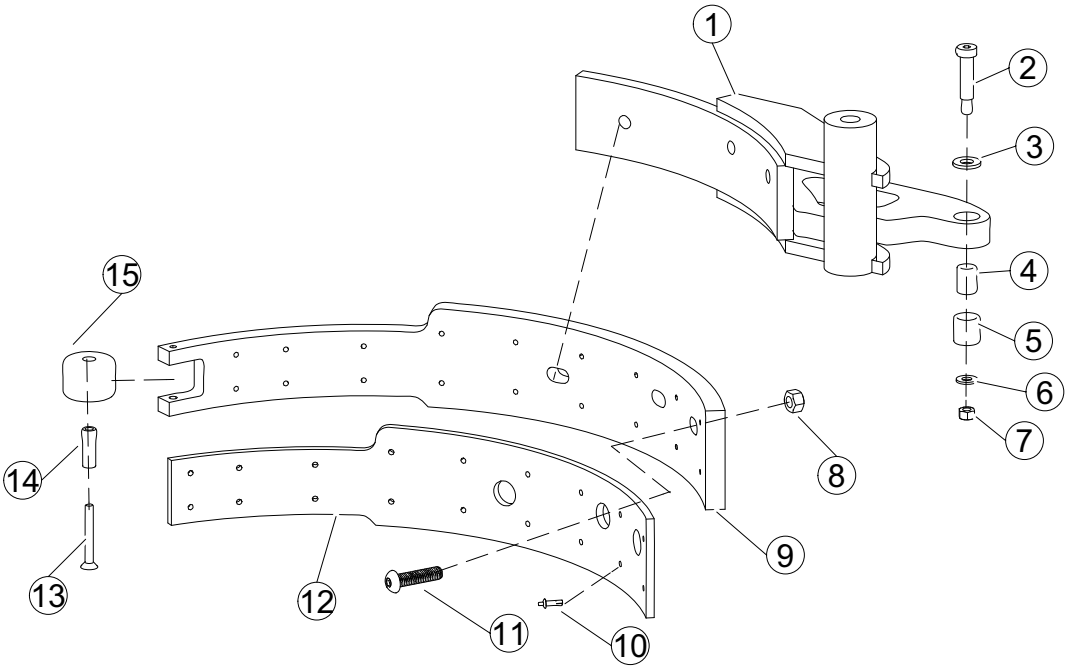


| REF. NO. | PART NO. | DESCRIPTION | QTY. |
|---|---|---|---|
| 1 | 0992-586 | PIVOT | 1 |
| 2 | QUB05465 | BOLT | 1 |
| 3 | QUR01912 | WASHER | 1 |
| 4 | QUB00235 | BUSHING | 1 |
| 5 | QUB00595 | BUSHING | 1 |
| 6 | QUR01902 | WASHER | 1 |
| 7 | QUE01997 | NUT | 1 |
| 8 | QUE02383 | NUT | 3 |
| 9 | 0992-584 | ARM- Single | 1 |
| 10 | QUR02167 | RIVET | 18 |
| 11 | QUB05820 | BOLT | 3 |
| 12 | 0992-592 | LINER, Rubber - Single | 1 |
| 13 | QUB03218 | BOLT | 1 |
| 14 | QUB00643 | BUSHING | 1 |
| 15 | 0992-590 | ROLLER | 1 |
| | 0992-684 | ARM ASSEMBLY - Includes Items 9, 10 & 12 | 1 |

# HYDRAULICS - ARM

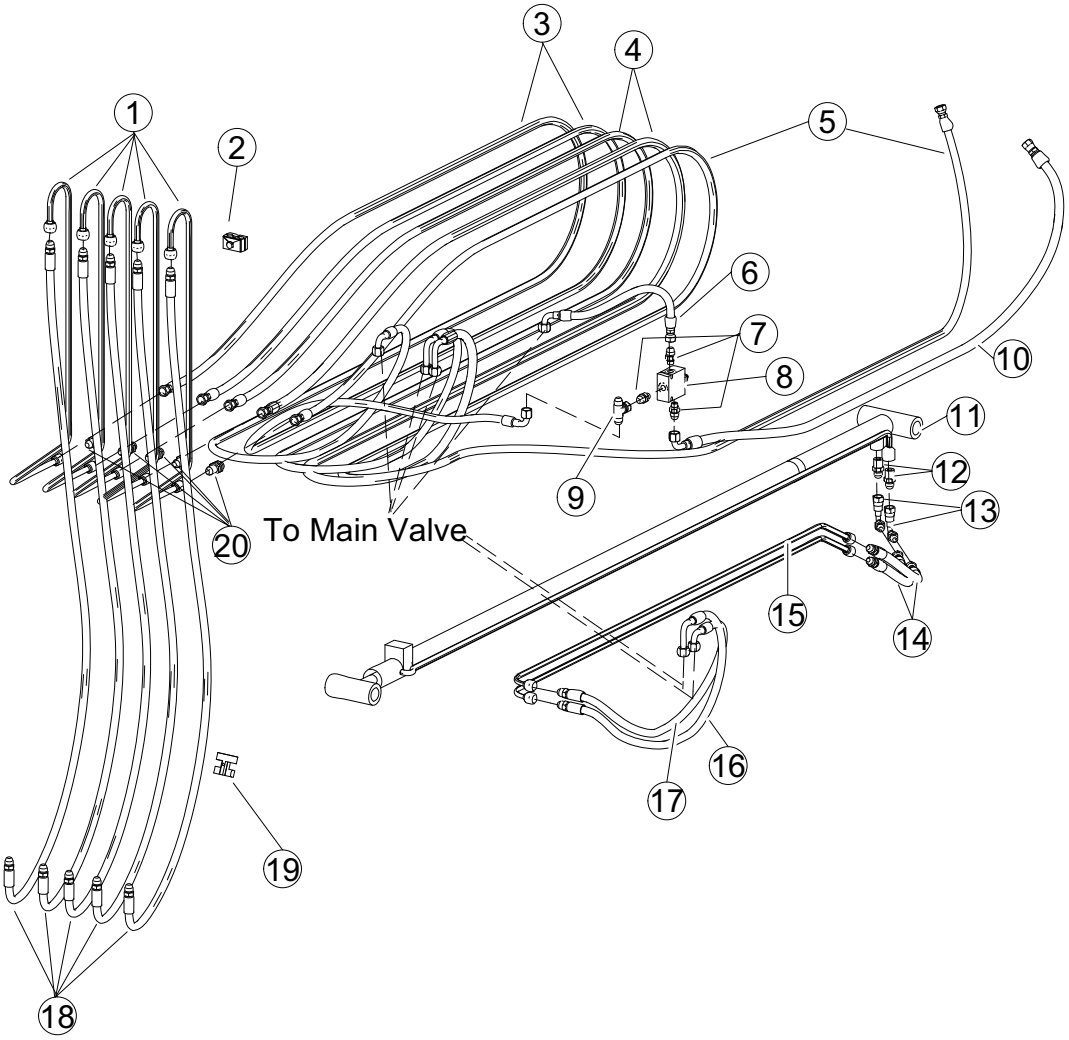

# HYDRAULICS - ARM

| REF. NO. | PART NO. | DESCRIPTION | QTY. |
|---|---|---|---|
| 1 | 0750-824 | TUBE | 5 |
| 2 | HYS00602 | TUBE SUPPORT | 3 |
| 3 | 0090-453 | HOSE | 2 |
| 4 | 0090-458 | HOSE | 2 |
| 5 | 0090-479 | HOSE | 1 |
| 6 | 154363 | HOSE - Belt Grabber Style | 1 |
| | 0090-482 | HOSE - “RAV” Grabber Style | 1 |
| 7 | HYF04920 | ADAPTER | 3 |
| 8 | 0402-536 | VALVE, Relief | 1 |
| 9 | HYF05830 | TEE | 1 |
| 10 | 0090-493 | HOSE | 1 |
| 11 | 0020-177 | CYLINDER | 1 |
| 12 | HYF01800 | ADAPTER | 2 |
| 13 | HYF08050 | ELBOW | 2 |
| 14 | 167105 | HOSE | 2 |
| 15 | 0751-012 | TUBE | 2 |
| 16 | 0090-440 | HOSE | 1 |
| 17 | 0090-438 | HOSE | 1 |
| 18 | 0090-480 | HOSE | 5 |
| 19 | QUA00010 | HOSE CLAMP | 9 |
| 20 | HYF06500 | CONNECTOR, Bulkhead | 5 |
| | 0045-436 | HOSE/CABLE Carrier Chain (Plastic - Not Shown) | 1 |

# HYDRAULICS - ARM (Dual Arm Rollers)

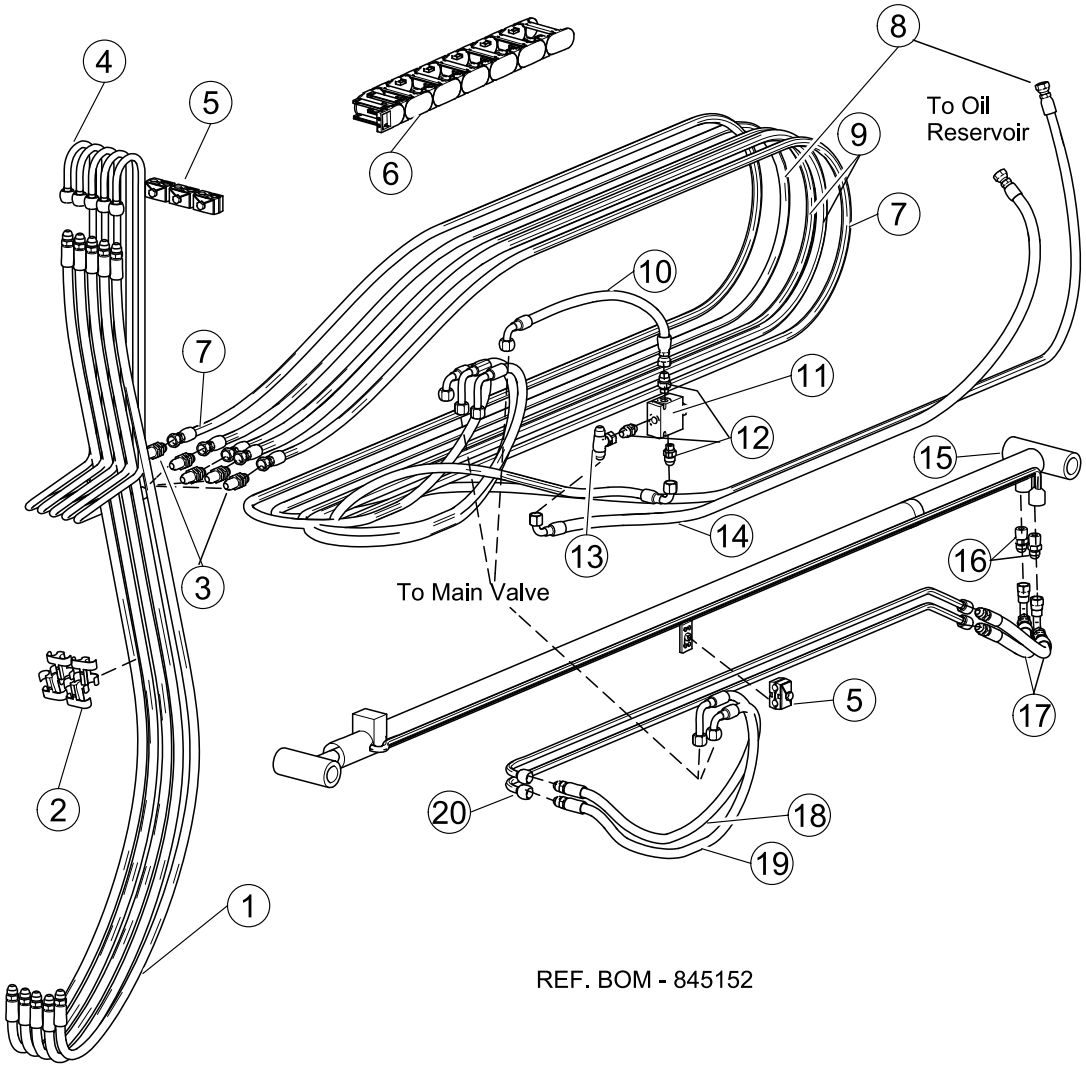


REF. BOM - 845152

# HYDRAULICS - ARM (Dual Arm Rollers)

| REF. NO. | PART NO. | DESCRIPTION | QTY. |
|---|---|---|---|
| 1 | 169353 | HOSE | 5 |
| 2 | QUA00010 | HOSE CLAMP | 12 |
| 3 | HYF06500 | CONNECTOR, Bulkhead | 5 |
| 4 | 0750-824 | TUBING | 5 |
| 5 | HYS00602 | SUPPORT, Tube | 4 |
| 6 | 0045-436 | HOSE/CABLE, Carrier Chain - Plastic | 1 |
| 7 | 169347 | HOSE | 2 |
| 8 | 169349 | HOSE | 1 |
| 9 | 169348 | HOSE | 2 |
| 10 | 169350 | HOSE | 1 |
| 11 | 0402-536 | VALVE, Relief | 1 |
| 12 | HYF04920 | CONNECTOR | 3 |
| 13 | HYF05830 | TEE | 1 |
| 14 | 169351 | HOSE | 1 |
| 15 | 0020-177 | CYLINDER | 1 |
| 16 | HYF01800 | ADAPTERS | 3 |
| 17 | 68533 | HOSE | 2 |
| 18 | 169343 | HOSE | 1 |
| 19 | 169532 | HOSE | 1 |
| 20 | 0751-012 | CYLINDER | 1 |

# GRABBER HYDRAULICS

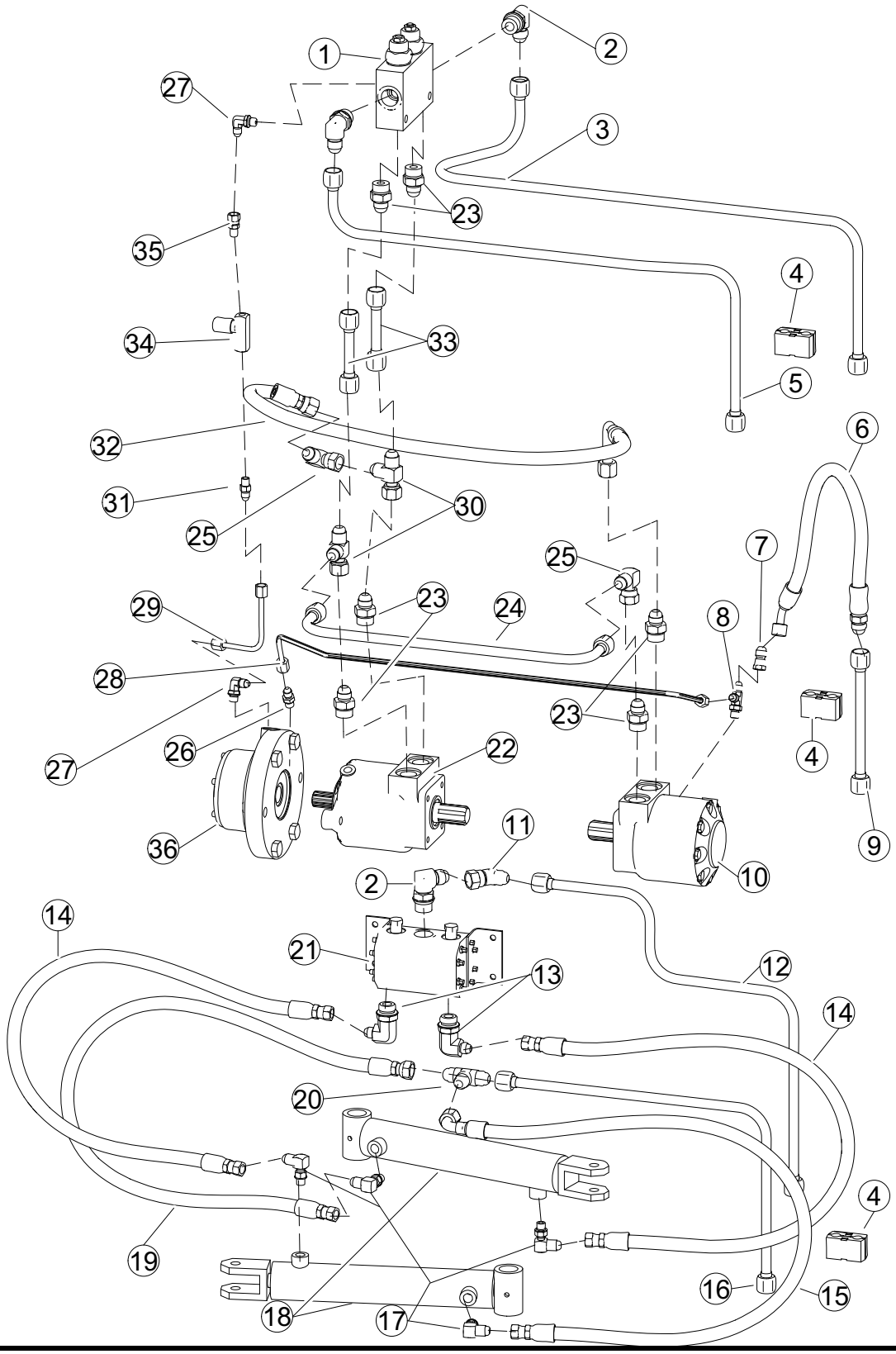

# GRABBER HYDRAULICS

| REF. NO. | PART NO. | DESCRIPTION | QTY. |
|---|---|---|---|
| 1 | HYV02681 | VALVE, Counterbalance | 1 |
| 2 | HYV07450 | ELBOW | 3 |
| 3 | 0089-212 | TUBE | 1 |
| 4 | HYS00602 | TUBE SUPPORT | 3 |
| 5 | 0089-210 | TUBE | 1 |
| 6 | 172179 | HOSE | 1 |
| 7 | HYF10009 | ADAPTER | 1 |
| 8 | HYF05815 | TEE | 1 |
| 9 | 0089-211 | TUBE | 1 |
| 10 | 0039-211 | MOTOR | 1 |
| 11 | HYF02925 | ELBOW | 1 |
| 12 | 0089-216 | TUBE | 1 |
| 13 | HYF05159 | ELBOW | 2 |
| 14 | 0090-442 | HOSE | 2 |
| 15 | 0090-443 | HOSE | 1 |
| 16 | 0089-217 | TUBE | 1 |
| 17 | HYF07300 | ELBOW | 4 |
| 18 | 0020-092 | CYLINDER | 2 |
| 19 | 0090-444 | HOSE | 1 |
| 20 | HYF06100 | TEE | 1 |
| 21 | HYV02542 | VALVE, Flow Divider | 1 |
| 22 | 0039-212 | MOTOR | 1 |
| 23 | HYF04900 | ADAPTER | 6 |
| 24 | 0089-215 | TUBE | 1 |
| 25 | HYF08000 | ELBOW | 1 |
| 26 | HYF04843 | ADAPTER | 1 |
| 27 | HYF03575 | ELBOW | 2 |
| 28 | 0089-213 | TUBE | 1 |
| 29 | 0089-219 | TUBE | 1 |
| 30 | HYF05825 | TEE | 2 |
| 31 | HYF00900 | CONNECTOR | 1 |
| 32 | 0090-445 | HOSE | 1 |
| 33 | 0089-218 | TUBE | 2 |
| 34 | HYV02715 | VALVE, Flow | 1 |
| 35 | HYF07036 | CONNECTOR | 1 |
| 36 | 0044-285 | BRAKE | 1 |

# GRABBER HYDRAULIC - Arm 845152 and after

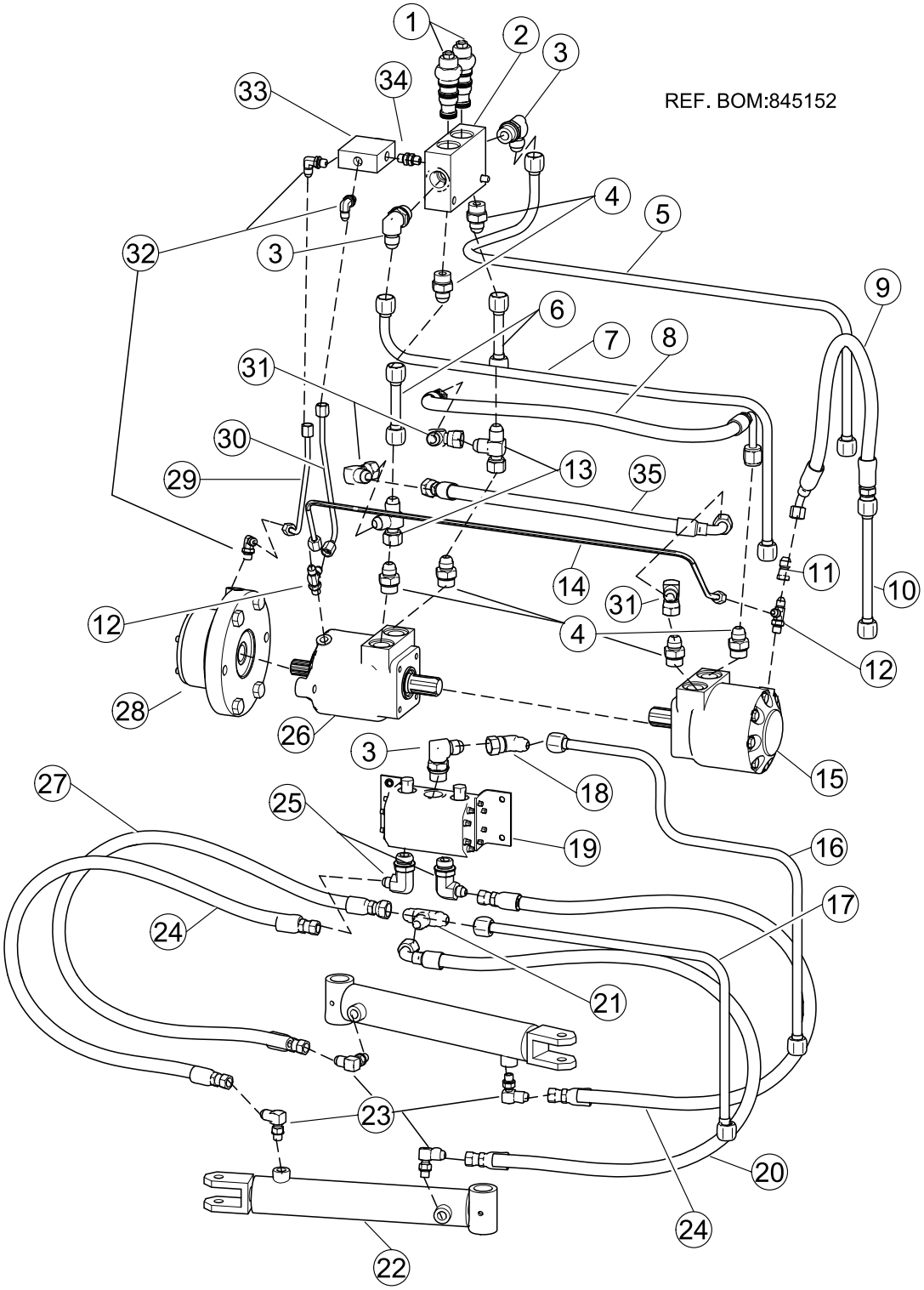

# GRABBER HYDRAULICS - Arm 845152 and After

| REF. NO. | PART NO. | DESCRIPTION | QTY. |
|---|---|---|---|
| 1 | HYV02680 | CARTRIDGE, Counter Balance | 2 |
| 2 | HYV02681 | BLOCK, Valve | 1 |
| 3 | HYF07450 | ELBOW | 3 |
| 4 | HYF04900 | CONNECTOR | 6 |
| 5 | 0089-212 | TUBE | 1 |
| 6 | 0089-218 | TUBE | 2 |
| 7 | 0089-210 | TUBE | 1 |
| 8 | 180308 | HOSE | 1 |
| 9 | 169354 | HOSE | 1 |
| 10 | 0089-211 | TUBE | 1 |
| 11 | HYF10009 | ADAPTER | 1 |
| 12 | HYF05815 | TEE | 2 |
| 13 | HYF05825 | TEE | 2 |
| 14 | 0089-213 | TUBE | 1 |
| 15 | 0039-211 | MOTOR | 1 |
| 16 | 0089-216 | TUBE | 1 |
| 17 | 0089-217 | TUBE | 1 |
| 18 | HYF02925 | ELBOW | 1 |
| 19 | HYV02542 | VALVE, Flow Divider | 1 |
| 20 | 169345 | HOSE | 1 |
| 21 | HYF06100 | TEE | 1 |
| 22 | 0020-092 | CYLINDER | 2 |
| 23 | HYF07300 | ELBOW | 4 |
| 24 | 169344 | HOSE | 2 |
| 25 | HYF05159 | ELBOW | 2 |
| 26 | 0039-212 | MOTOR | 1 |
| 27 | 10801 | HOSE | 1 |
| 28 | 0044-285 | BRAKE | 1 |
| 29 | 180307 | TUBE | 1 |
| 30 | 180830 | TUBE | 1 |
| 31 | HYF08000 | ELBOW | 2 |
| 32 | HYF03575 | ELBOW | 3 |
| 33 | 162361 | VALVE, Relief | 1 |
| 34 | HYF04846 | CONNECTOR | 1 |
| 35 | 169350 | HOSE | 1 |

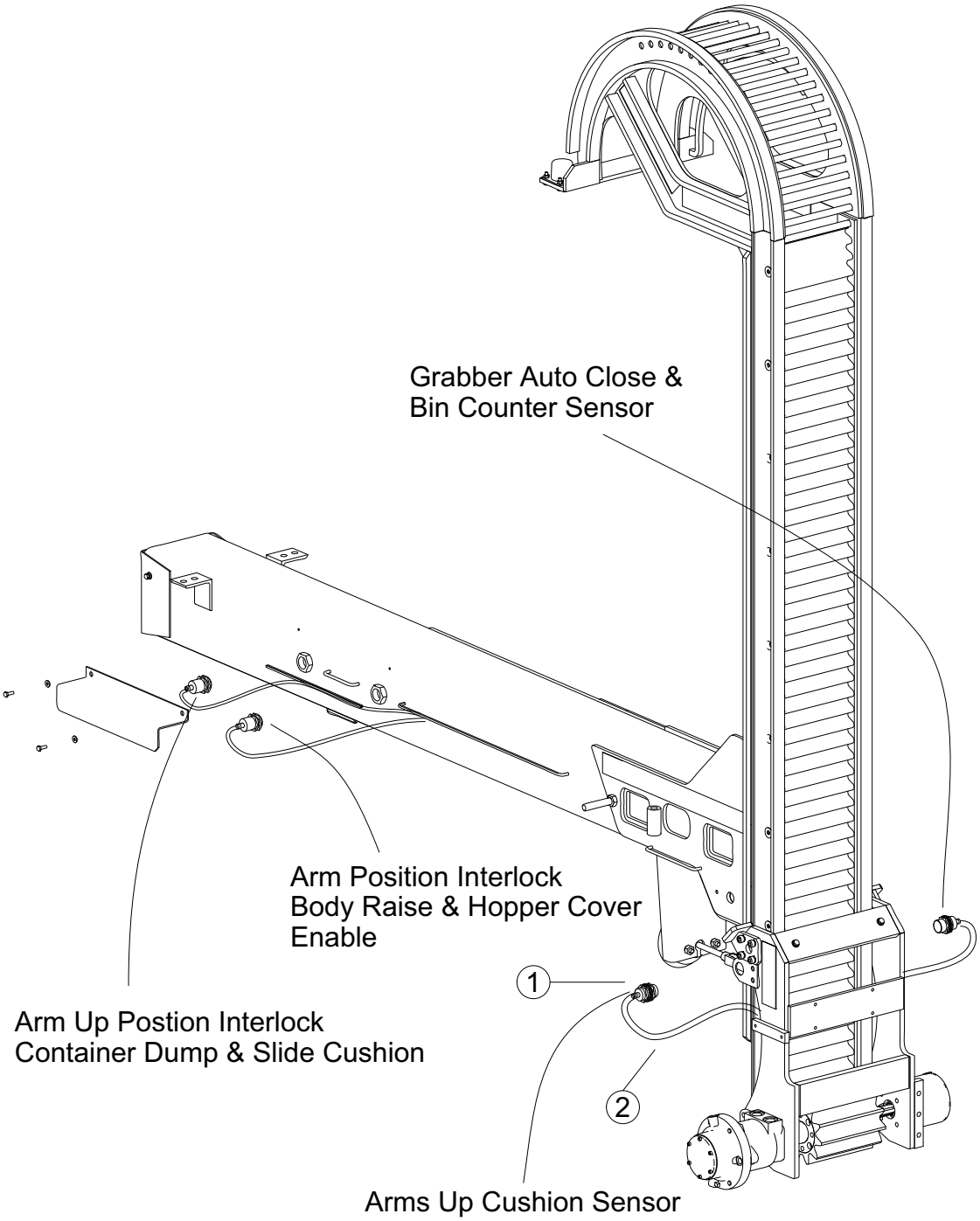
Grabber Auto Close &
Bin Counter Sensor
Arm Position Interlock
Body Raise & Hopper Cover
Enable
1
Arm Up Postion Interlock
Container Dump & Slide Cushion
2
Arms Up Cushion Sensor

| REF. NO. | PART NO. | DESCRIPTION | QTY. |
|---|---|---|---|
| 1 | 0054-005 | SENSOR, Proximity | 4 |
| 2 | ELC10090 | CABLE, Sensor (Note: Cable has sensor end connector only) | 4 |

# VALVE - HYV02681

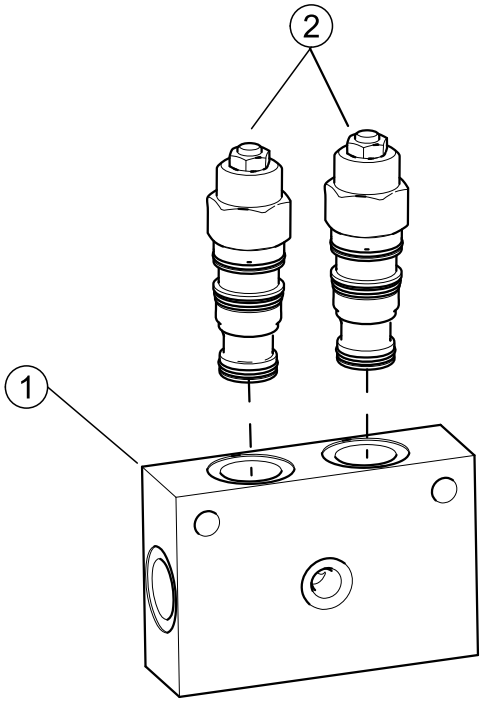


| REF. NO. | PART NO. | DESCRIPTION | QTY. |
|---|---|---|---|
| 1 | HYV02681 | VALVE, Body | 1 |
| 2 | HYV02680 | VALVE, Cartridge | 2 |

# VALVE - HYV02542

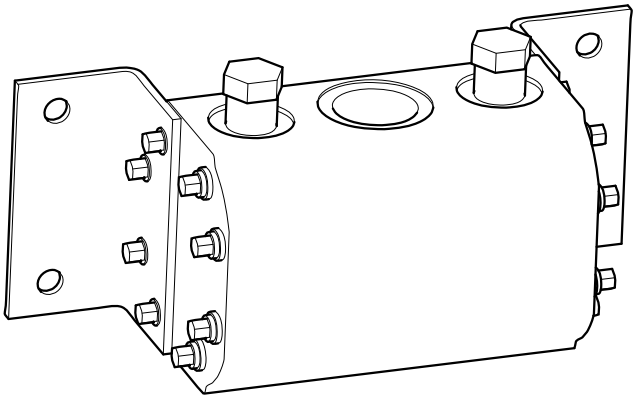

| REF. NO. | PART NO. | DESCRIPTION | QTY. |
|---|---|---|---|
| | HYV02542 | VALVE, Flow Divider - Complete | 1 |

# MOTOR - 0039-211

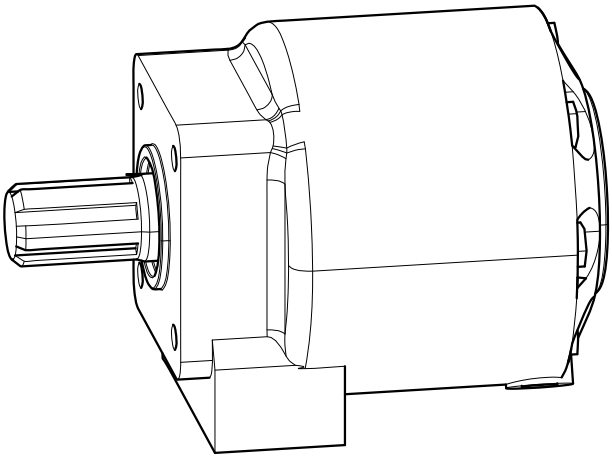

| REF. NO. | PART NO. | DESCRIPTION | QTY. |
|---|---|---|---|
| | 0039-211 | MOTOR - Complete | 1 |
| | 0039-215 | KIT, Seal | 1 |

# MOTOR - 0039-212

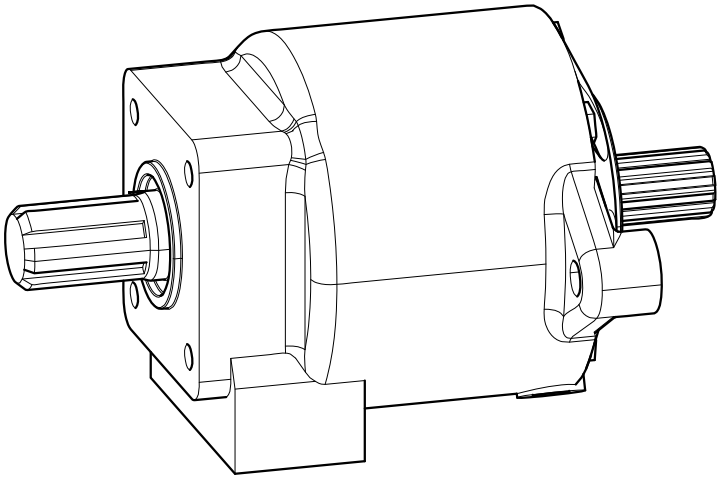

| REF. NO. | PART NO. | DESCRIPTION | QTY. |
|---|---|---|---|
| | 0039-212 | MOTOR - Complete | 1 |
| | 0039-215 | KIT, Seal | 1 |

# BRAKE - 0044-285

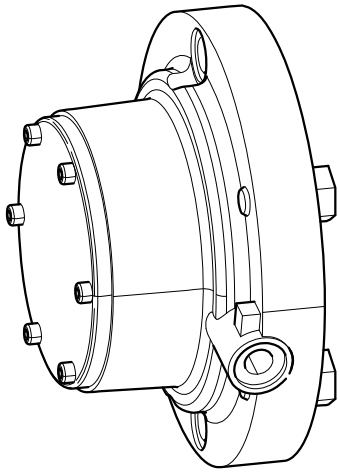

| REF. NO. | PART NO. | DESCRIPTION | QTY. |
|---|---|---|---|
| | 0044-285 | BRAKE - Complete | 1 |
| | 0044-284 | KIT, Seal | |

# 0020-177 - IN/OUT CYLINDER

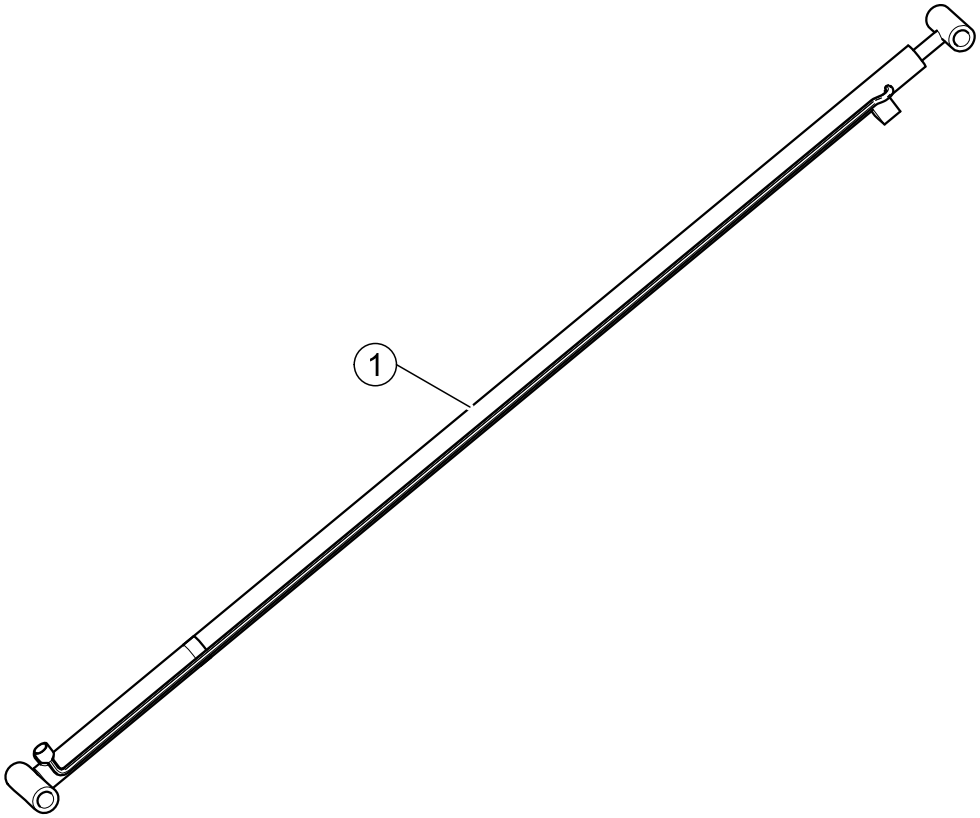


| REF. NO. | PART NO. | DESCRIPTION | QTY. |
|---|---|---|---|
| 1 | 0020-177 | CYLINDER - In/Out Complete | 1 |
| | 0022-420 | KIT, Seal | 1 |

# 0020-092 GRABBER CYLINDER

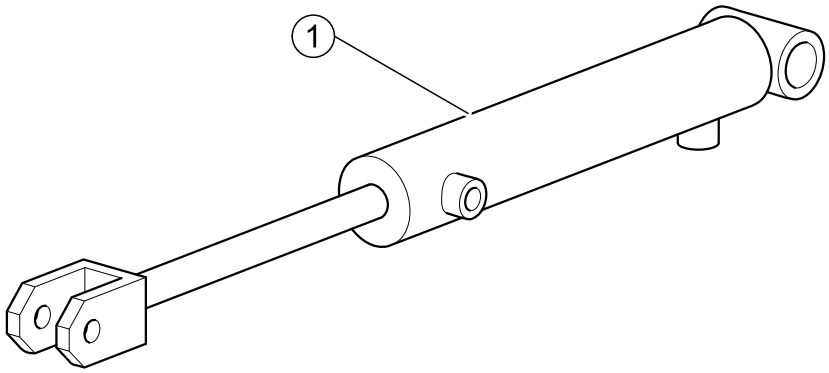


| REF. NO. | PART NO. | DESCRIPTION | QTY. |
|---|---|---|---|
| 1 | 0020-092 | CYLINDER - Grabber - Complete | 2 |
| | 0022-441 | KIT, Seal | 2 |

# labrie*plus* - USA

1981 W. Snell Road
Oshkosh, WI. 54904

Mailing Address:
P.O. Box 2785
Oshkosh, WI. 54903-2785

Parts, Service and Warranty
(During Business Hours)
7:00 A.M. to 7:00 P.M. Central Standard Time

Technical Support Service (24 Hours)

Toll Free: 1-800-231-2771
Telephone: 1-920-233-2770
General Fax: 1-920-232-2496
Sales Fax: 1-920-232-2498

# labrie*plus* - Canada

175 Route du Pont
St-Nicolas, QC G7A 2T3

Mailing Address:
175 Route du Pont
St-Nicolas, QC G7A 2T3

Parts, Service and Warranty
(During Business Hours)
8:00 A.M. to 5:00 P.M. Eastern Standard Time

Technical Support Service (24 Hours)

Toll Free: 1-877-831-8250
Telephone: 1-418-831-8250
Service Fax: 1-418-831-1673
Parts Fax: 1-418-831-7561

Part #153182_R/